| TYPE | OUTPUT | | POLE | TIME RATING | VOLTAGE V | Hz | SYN. SPEED R. P. M |
|---|---|---|---|---|---|---|---|
| | HP. | kW. | | | | | |
| AFHH | | | 4 | CONT. | | | |

TOTALLY ENCLOSED FAN-COOLED TYPE. SQUIRREL-CAGE ROTOR

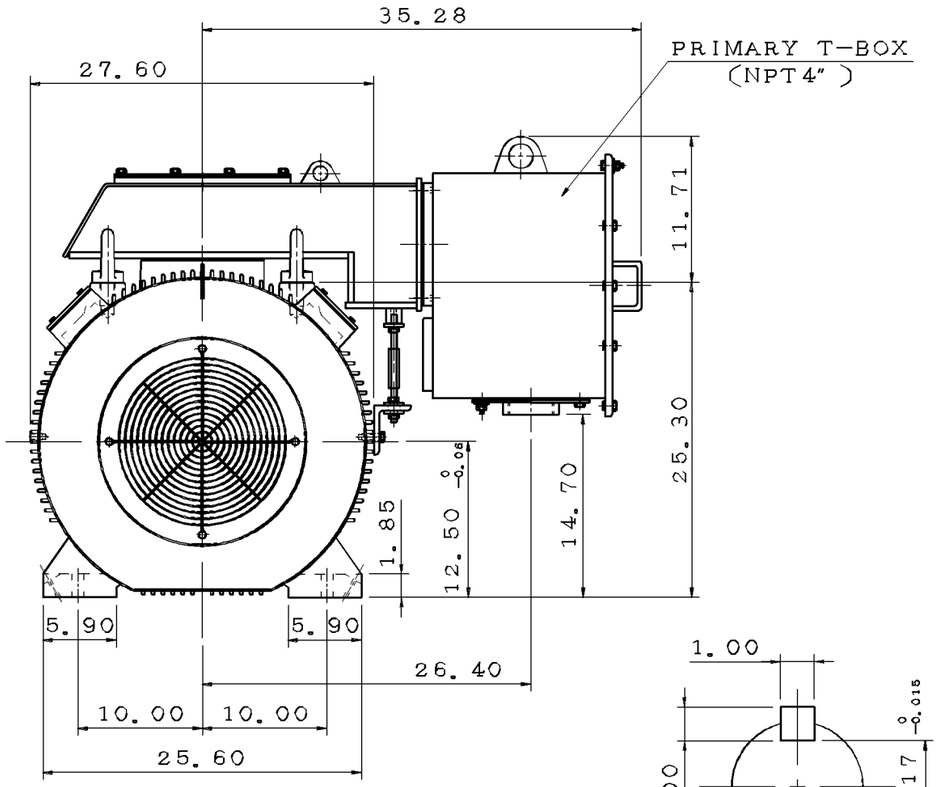


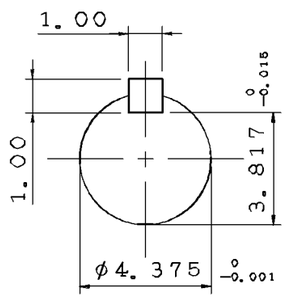


SHAFT END
(ENLARGED VIEW)

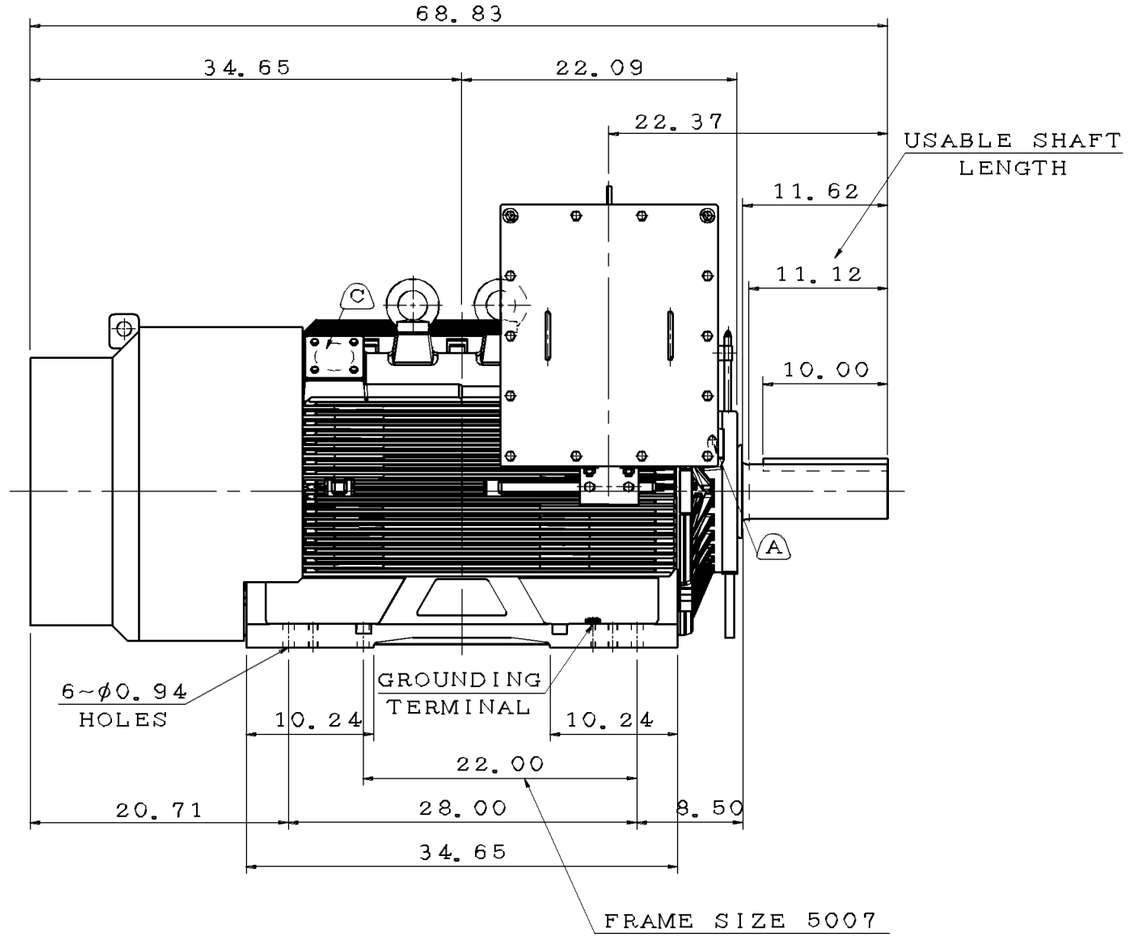


NOTE:
1. DIMENSIONS IN inch
2. FRAME NO. 5009C
3. F CLASS INSULATION
4. FOR BELT DRIVE
5. ENCLOSURE: IP55
6. BEARING SIZE: DRIVE-END NU324C3
   OPP. DRIVE-END 6320C3
7. MOTOR APPROX. WEIGHT: 4120 lb

(B) FOR BEARING RTD, END BRACKETS SHALL BE PRE-DRILLED AND PLUGGED.

(C) FOR AUXILIARY, FRAME SHALL BE PRE-DRILLED AND COVERD WITH STEEL PLATE.

| | | |
|---|---|---|
| DWN. | L. JHENG | APR.22.2019 |
| CHKD. | H. WANG | APR.23.2019 |
| APPD. | C. WANG | APR.23.2019 |

DATE

OUTLINE DIMENSIONS

3-PHASE INDUCTION MOTOR

TECO Westinghouse

DWG NO. 5A040C161 REV:01

1/1